Oil-air coolers

series
OAC

according to directive 2014/34/EU

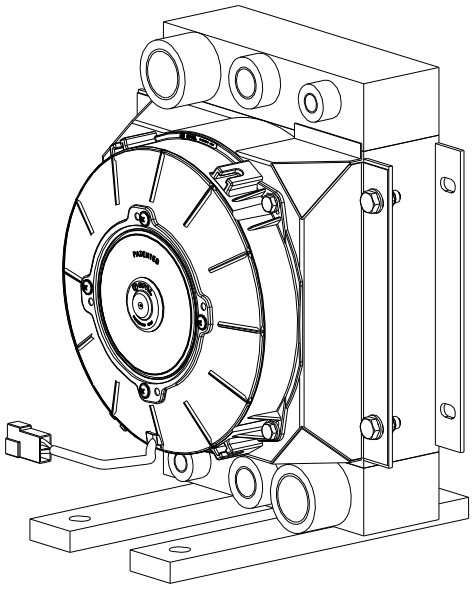

Oil-air cooler; example: OAC75 and OAC100

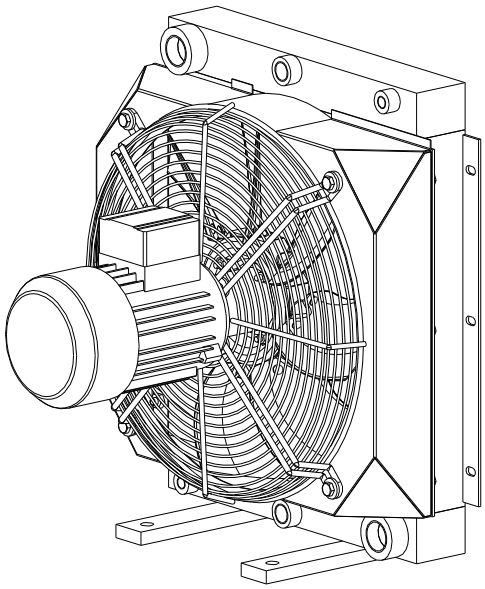

Oil-air cooler; example: OAC200 to OAC2000

The oil-air cooler series OAC is an efficient high-performance cooler. It has a compact design and was developed for cooling hydraulic oil, gear oil, lubricant and water-glycol.

Table of content

1 Technical data 3

2 Advice 8

2.1 General advice 8
2.2 Safety and advice symbols 8
2.3 General hazard warnings 8
2.4 Intended use 9

3 Storage, transport and packaging 9

3.1 Storage 9
3.2 Transport and packaging 9

4 Assembly 10

4.1 Components of oil-air cooler 10
4.2 Place of installation 11
4.3 Assembly of oil-air cooler 12
4.4 Thermal switch 12
4.5 Operating pressure and temperature 12
4.6 Electrical connection 13
4.7 Cooling medium 13
4.8 Cleaning 14
4.9 Marking of standard oil-air cooler 14
4.10 Diagrammes - pressure loss and power 14
4.11 Assembly - disassembly of the oil-air cooler into components 16

5 Start-up 17

6 Maintenance and service 17

7 Spares inventory, customer service addresses 18

8 Enclosure A Advice and instructions regarding the use in Ex potentially explosive atmospheres 19

8.1 Intended use in Ex potentially explosive atmospheres 19
8.2 Ex Marking for potentially explosive atmospheres 20
8.3 Start-up for the use in Ex potentially explosive atmospheres 21
8.4 Permissible accessories for the use in Ex potentially explosive atmospheres 22
8.5 EC Certificate of incorporation 23
8.6 EU Declaration of conformity 24

1 Technical data

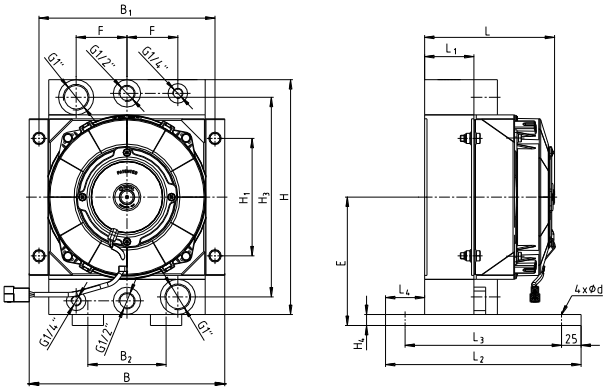

Illustration 1: OAC100 - OAC400 (12/24V)

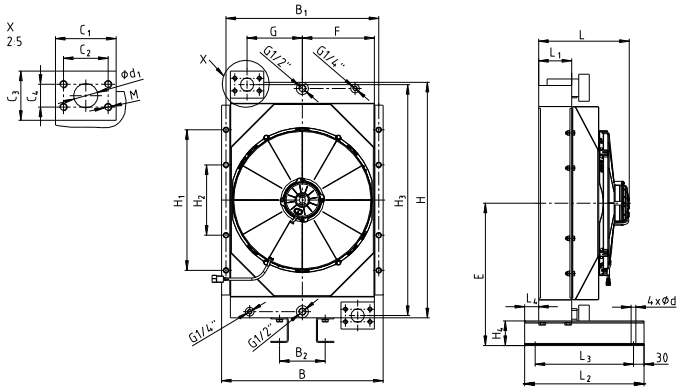

Illustration 2: OAC500 (12/24V)

Table 1: Dimensions - 12/24V

Cooler type	Dimensions in mm											
	L	L_1	L_2	L_3	L_4	B	B1	B2	H	H_1	H_2	H_3
OAC75-01 OAC75-02	150	45	-	-	-	250	225	-	300	150	-	255
OAC100-01 OAC100-02	167	64	280	200	50	250	225	100	300	150	-	255
OAC200-01 OAC200-02	167	64	280	200	50	350	325	174	410	240	-	360
OAC250-01 OAC250-02	197	95	280	200	50	350	325	174	410	240	-	360
OAC300-01 OAC300-02	230	65	250	200	49	446	421	200	500	320	-	450
OAC400-01 OAC400-02	260	95	280	230	55.5	446	421	200	500	320	-	450
OAC500-01 OAC500-02	259	95	340	280	40	460	435	130	670	400	200	657

Cooler type	Dimensions in mm											
	H_4	H_5	d	d_1	C1	C2	C3	C4	M	F	G	E
OAC75-01 OAC75-02	-	-	-	-	-	-	-	-	-	79.5	-	150
OAC100-01 OAC100-02	14	-	14	-	-	-	-	-	-	75	-	164
OAC200-01 OAC200-02	14	-	14	-	-	-	-	-	-	115	-	219
OAC250-01 OAC250-02	14	-	14	-	-	-	-	-	-	115	-	219
OAC300-01 OAC300-02	14	-	14	-	-	-	-	-	-	160	-	264
OAC400-01 OAC400-02	14	-	14	-	-	-	-	-	-	160	-	264
OAC500-01 OAC500-02	70	-	13.5	38	95	69.9	77	35.7	M12	150	157.5	405

1 Technical data

Page 3 continued:

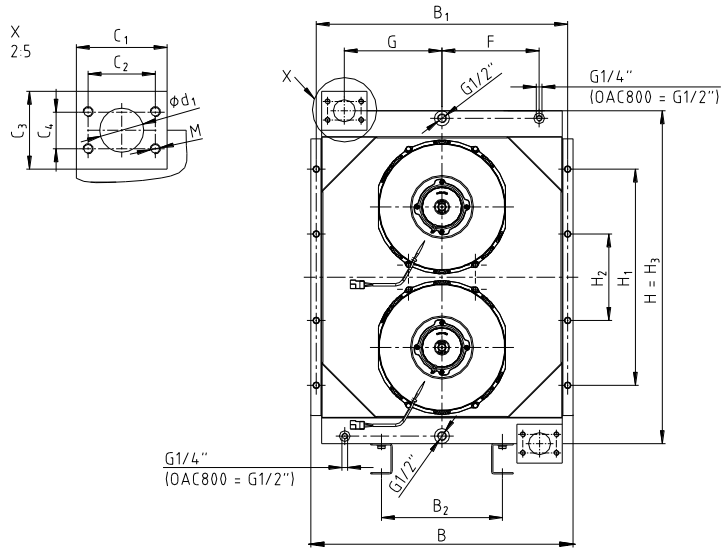

Illustration 3: OAC600 - OAC800 (12/24V)

Continuation: Table 1: Dimensions - 12/24V

Cooler type	Dimensions in mm											
	L	L_1	L_2	L_3	L_4	B	B1	B2	H	H_1	H_2	H_3
OAC600-01 OAC600-02	223	94	340	280	40	607	582	280	770	500	200	770
OAC700-01 OAC700-02	242	94	340	280	40	607	582	280	920	700	300	920
OAC800-01 OAC800-02	388	140	450	390	40	701	676	280	920	700	300	920

Cooler type	Dimensions in mm											
	H_4	H_5	d	d_1	C1	C2	C3	C4	M	F	G	E
OAC600-01 OAC600-02	70	-	13.5	51	105	77.8	90	42.9	M12	225	226	455
OAC700-01 OAC700-02	70	-	13.5	51	105	77.8	90	42.9	M12	225	226	530
OAC800-01 OAC800-02	70	-	13.5	51	105	77.8	90	42.9	M12	272	273	530

1 Technical data

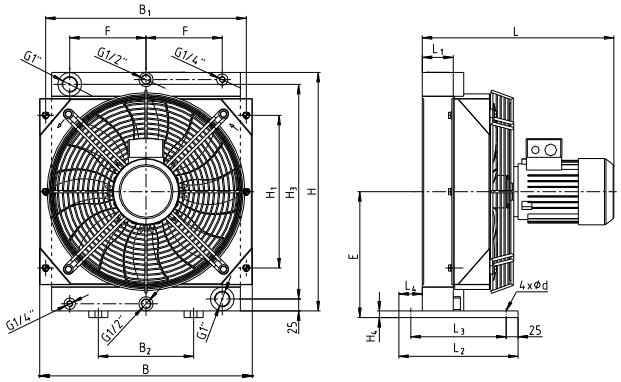

Illustration 4: OAC200 - OAC400 (230/400V)

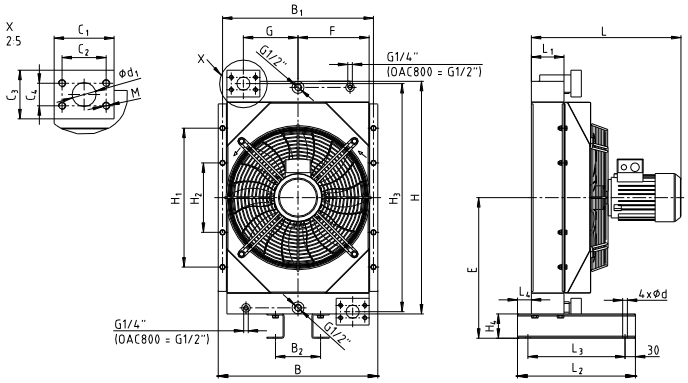

Illustration 5: OAC500 - OAC800 (230/400V)

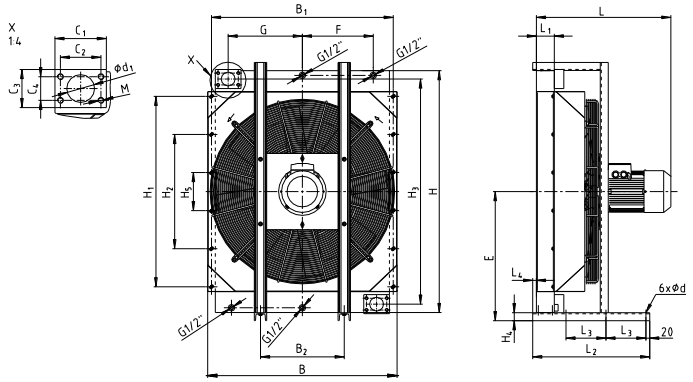

Illustration 6: OAC850 - OAC2000 (230/400V)

Table 2: Dimensions - 230/400V

Cooler type	Dimensions in mm											
	L	L_1	L_2	L_3	L_4	B	B1	B2	H	H_1	H_2	H_3
OAC200-03	360	64	280	200	50	350	325	174	410	240	-	360
OAC250-03	390	95	280	230	56	350	325	174	410	240	-	360
OAC300-03	402	65	250	200	49	446	421	200	500	320	-	450
OAC400-03	431	95	280	230	56	446	421	200	500	320	-	450
OAC500-03	431	95	340	280	40	460	435	130	670	400	200	657
OAC600-03	532	95	340	280	40	607	582	280	770	500	200	770
OAC700-03	542	95	340	280	40	608	582	280	920	700	300	920
OAC800-03	665	140	450	390	40	701	676	280	920	700	300	920
OAC850-03	667	95	500	180	-	870	835	350	960	690	230	910
OAC900-03	670	95	590	210	-	995	955	440	1270	1000	600	1182
OAC1000-03	690	113	615	210	-	995	955	440	1270	1000	600	1182
OAC2000-03	900	140	750	210	-	1286	1206	525	1420	1000	600	1332

Cooler type	Dimensions in mm											
	H_4	H_5	d	d_1	C1	C2	C3	C4	M	F	G	E
OAC200-03	14	-	14	-	-	-	-	-	-	115	-	219
OAC250-03	14	-	14	-	-	-	-	-	-	115	-	219
OAC300-03	14	-	14	-	-	-	-	-	-	160	-	264
OAC400-03	14	-	14	-	-	-	-	-	-	160	-	264
OAC500-03	70	-	13.5	38	95	69.9	77	35.7	M12	150	157.5	405
OAC600-03	70	-	13.5	51	105	77.8	90	42.9	M12	225	226	455
OAC700-03	70	-	13.5	51	105	77.8	90	42.9	M12	225	226	530
OAC800-03	70	-	13.5	51	105	77.8	90	42.9	M12	272	273	530
OAC850-03	42	-	14	51	105	77.8	90	42.9	M12	350	340	523
OAC900-03	42	200	14	73	135	106.5	100	62	M16	372.5	390	678
OAC1000-03	42	200	14	73	135	106.5	100	62	M16	372.5	390	678
OAC2000-03	45	200	14	73	135	106.5	100	62	M16	532	532	756

1 Technical data

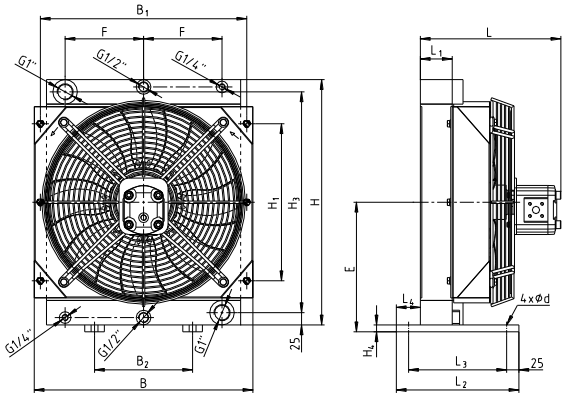

Illustration 7: OAC200 - OAC400 (hydraulic)

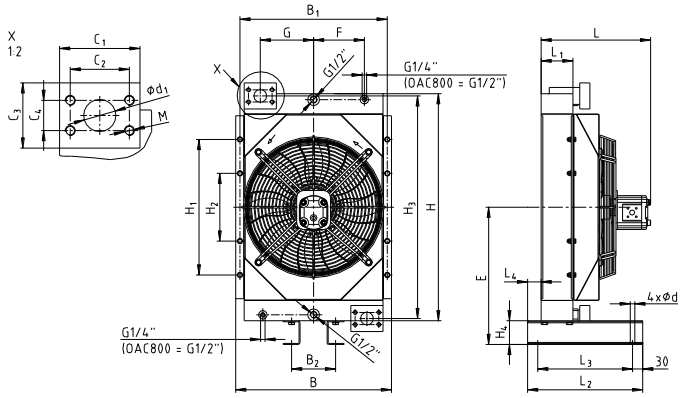

Illustration 8: OAC500 - OAC800 (hydraulic)

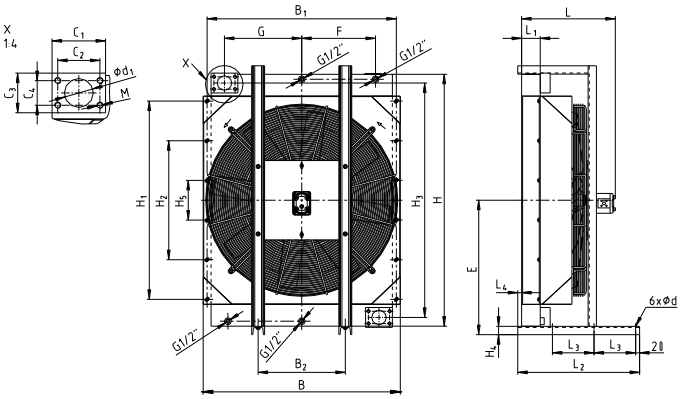

Illustration 9: OAC850 - OAC1000 (hydraulic)

Table 3: Dimensions - hydraulic

Cooler type	Dimensions in mm											
	L	L_1	L_2	L_3	L_4	B	B1	B2	H	H_1	H_2	H_3
OAC200-04	245	65	250	200	50	350	325	174	410	240	-	360
OAC250-04	275	95	280	230	56	350	325	174	410	240	-	360
OAC300-04	295	65	250	200	50	446	421	200	500	320	-	450
OAC400-04	325	95	280	230	56	446	421	200	500	320	-	450
OAC500-04	323	95	340	280	40	460	435	130	670	400	200	657
OAC600-04	400	95	340	280	40	607	582	280	770	500	200	770
OAC700-04	411	95	340	280	40	608	582	280	920	700	300	920
OAC800-04	546	140	450	390	40	701	676	280	920	700	300	920
OAC850-04	471	95	500	180	-	870	835	350	960	690	230	910
OAC900-04	475	95	615	210	19.5	995	955	440	1270	1000	600	1182
OAC1000-04	505	113	615	210	-	995	955	440	1270	1000	600	1182

Cooler type	Dimensions in mm											
	H_4	H_5	d	d_1	C1	C2	C3	C4	M	F	G	E
OAC200-04	14	-	14	-	-	-	-	-	-	115	-	219
OAC250-04	14	-	14	-	-	-	-	-	-	115	-	219
OAC300-04	14	-	14	-	-	-	-	-	-	160	-	264
OAC400-04	14	-	14	-	-	-	-	-	-	160	-	264
OAC500-04	70	-	13.5	38	95	69.9	77	35.7	M12	150	157.5	405
OAC600-04	70	-	13.5	51	105	77.8	90	42.9	M12	225	226	455
OAC700-04	70	-	13.5	51	105	77.8	90	42.9	M12	225	226	530
OAC800-04	70	-	13.5	51	105	77.8	90	42.9	M12	272	273	530
OAC850-04	42	-	14	51	105	77.8	90	42.9	M12	350	340	523
OAC900-04	42	200	14	73	135	106.5	100	62	M16	372.5	390	678
OAC1000-04	42	200	14	73	135	106.5	100	62	M16	372.5	390	678

1 Technical data

Table 4: Fan drive - 12/24V

Cooler type	Voltage in V	Drive in kW	Speed in rpm	Amperage in A		Protection class	Fan Ø in mm	Weight in kg
				Start-up	Standard			
OAC75-01	12	0.09	3950	13.8	5.7	IP68	190	5
OAC75-02	24	0.06	3625	5.9	2.4			
OAC100-01	12	0.09	3950	13.8	5.7			6
OAC100-02	24	0.06	3625	5.9	2.4			
OAC200-01	12	0.10	2838	16.7	6.4		280	11
OAC200-02	24	0.11	2925	14.1	3.9			
OAC250-01	12	0.10	2838	16.7	6.4			13
OAC250-02	24	0.11	2925	14.1	3.9			
OAC300-01	12	0.22	3080	23.9	13.7		350	16
OAC300-02	24	0.23	2730	23.3	7.0			
OAC400-01	12	0.22	3080	23.9	13.7			22
OAC400-02	24	0.23	2730	23.3	7.0			
OAC500-01	12	0.24	2600	24.0	13.2		385	30
OAC500-02	24	0.24	2700	24.8	7.8			
OAC600-01	12	2x 0.10	2838	2x 16.7	2x 6.4		280	43
OAC600-02	24	2x 0.11	2925	2x 14.1	2x 3.9			
OAC700-01	12	2x 0.24	2600	2x 25	2x 13.2		385	53
OAC700-02	24	2x 0.24	2700	2x 24.2	2x 7.8			
OAC800-01	12	2x 0.24	2600	2x 25	2x 13.2			81
OAC800-02	24	2x 0.24	2700	2x 24.2	2x 7.8			

Table 5: Fan drive - 230/400V with 50Hz or 460V with 60Hz

Cooler type	Drive in kW		Speed in rpm		Amperage in A		Protection class		Fan Ø in mm	Noise in dbA	Weight in kg
	50Hz	60Hz	50Hz	60Hz	50Hz	60Hz	Standard	Marine			
OAC200-03	0.18	0.21	1350	1650	0.58	0.57	IP55	IP56	280	66	16
OAC250-03											20
OAC300-03	0.37	0.43	1370	1670	1.04	1.02			380	76	24
OAC400-03											29
OAC500-03										78	37
OAC600-03	0.75	0.86	1440	1740	1.79	1.72			520		57
OAC700-03											70
OAC800-03	1.5	1.75	1435	1730	3.3	3.3			630		97
OAC850-03	2.2	2.55	965	1165	5.2	4.75			750	79	130
OAC900-03		-		-		-			900	85	186
OAC1000-03-6										87	198
OAC1000-03-4	7.5		1470							97	223
OAC2000-03-6			975		9.33		-	-	1000	92	357
OAC2000-03-4	18.5		1470							100	429

Table 6: Fan drive - hydraulic

Cooler type	Displacement in ccm	Speed in rpm	Fan Ø in mm	Noise in dbA	Weight in kg
OAC200-04-06	6.3	1500	280	66	15
OAC250-04-06					
OAC300-04-06			380	75	21
OAC300-04-08	7.9				
OAC300-04-11	10.9				
OAC400-04-06	6.3			74	25
OAC400-04-08	7.9				
OAC400-04-11	10.9				
OAC500-04-06	6.3				34
OAC500-04-08	7.9				
OAC500-04-11	10.9				
OAC600-04-06	6.3		520	78	50
OAC600-04-08	7.9				
OAC600-04-11	10.9				
OAC700-04-06	6.3				60
OAC700-04-08	7.9				
OAC700-04-11	10.9				
OAC800-04-11			630		88
OAC800-04-14	13.9				
OAC850-04-11	10.9	1000	750	79	110
OAC850-04-14	13.9				
OAC900-04-14			900	85	155
OAC900-04-19	18.8				
OAC1000-04-19				87	188

2 Advice

2.1 General advice

Please read through these assembly instructions carefully before you assemble the oil-air cooler.
Pay special attention to the safety instructions!

The oil-air cooler is suitable and approved for the use in potentially explosive atmospheres. With the use in potentially explosive atmospheres observe the special notes and instructions regarding safety as per enclosure A.

The operating/assembly instructions are part of your product. Please store them carefully and close to the oil-air cooler. The copyright for these operating/assembly instructions remains with KTR.

2.2 Safety and advice symbols

Warning of potentially explosive atmospheres	This symbol indicates notes which may contribute to preventing bodily injuries or serious bodily injuries that may result in death caused by explosion.
Warning of personal injury	This symbol indicates notes which may contribute to preventing bodily injuries or serious bodily injuries that may result in death.
Warning of product damages	This symbol indicates notes which may contribute to preventing material or machine damage.
General advice	This symbol indicates notes which may contribute to preventing adverse results or conditions.
Warning of hot surfaces	This symbol indicates notes which may contribute to preventing burns with hot surfaces resulting in light to serious bodily injuries.

2.3 General hazard warnings

With assembly and disassembly of the oil-air cooler it has to be made sure that the entire drive train is secured against accidental switch-on. You may be seriously hurt by rotating parts. Make absolutely sure to read and observe the following safety instructions.

- All operations on and with the oil-air cooler have to be performed taking into account "safety first".
- Make sure to switch off the power pack before you perform your work on the oil-air cooler.
- Secure the power pack against accidental switch-on, e. g. by providing warning signs at the place of switch-on or removing the fuse for current supply.
- Do not reach into the operation area of the machine as long as it is in operation.
- Secure the rotating drive components against accidental contact. Provide for the necessary protection devices and covers.

2 Advice

2.4 Intended use

You may only assemble and disassemble the oil-air cooler if you

- have carefully read through the operating/assembly instructions and understood them
- are technically qualified and specifically trained (e. g. safety, environment, logistics)
- are authorized by your company

The oil-air cooler may only be used in accordance with the technical data (see chapter 1). Unauthorized modifications on the oil-air cooler are not admissible. We will not assume liability for any damage that may arise. In the interest of further development we reserve the right for technical modifications.
The **oil-air cooler series OAC** described in here corresponds to the technical status at the time of printing of these operating/assembly instructions.

3 Storage, transport and packaging

3.1 Storage

The oil-air coolers are supplied in preserved condition and with painting and can be stored in a dry and roofed place for 6 - 9 months.

The storage rooms must not include any ozone-generating devices like e. g. fluorescent light sources, mercury-vapour lamps or electrical high-voltage appliances.
Humid storage rooms are not suitable.
Make sure that condensation is not generated. The best relative air humidity is less than 65 %.

3.2 Transport and packaging

In order to avoid any injuries and any kind of damage always make use of proper transport and lifting equipment.

The oil-air coolers are packed differently each depending on size, number and kind of transport. Unless otherwise contractually agreed, packaging will follow the in-house packaging specifications of KTR.

4 Assembly

The oil-air cooler series OAC is supplied ready for assembly.

4.1 Components of oil-air cooler

Component	Quantity	Description
1	1	Oil-air cooler „Type OAC“

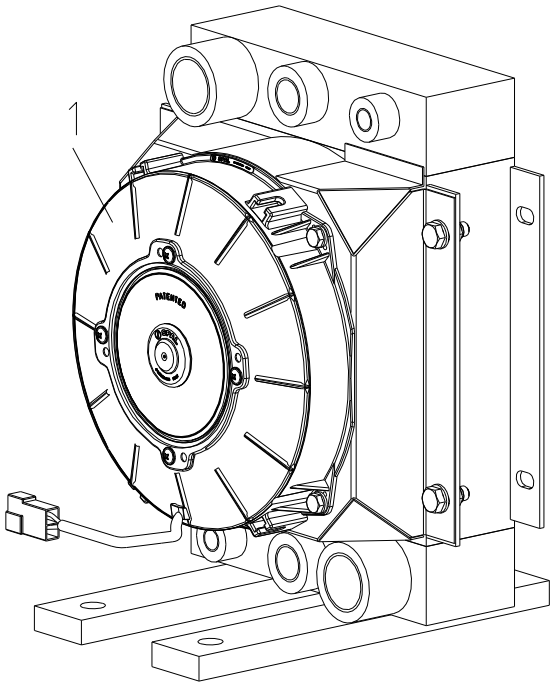

Illustration 10: Oil-air cooler; example: OAC75 and OAC100

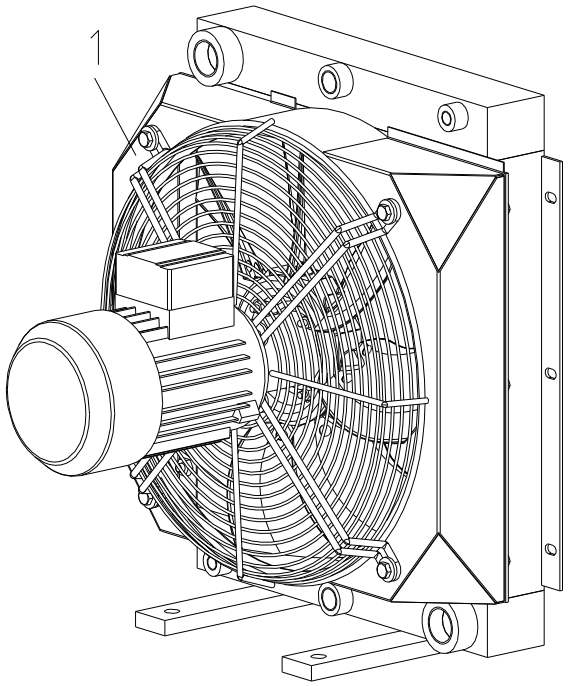

Illustration 11: Oil-air cooler; example: OAC200 to OAC2000

☞ **Before installing the oil-air coolers types OAC 100 - 800, assemble the feet supplied separately by means of the cap screws. Tighten the cap screws with a suitable torque key to the tightening torques T_A specified in table 7.**

Table 7: Cap screws DIN EN ISO 4762

Cooler type	OAC75 to OAC400	OAC500 to OAC800
Screw size M	M8	M10
Tightening torque T_A in Nm	11	22

4 Assembly

4.2 Place of installation

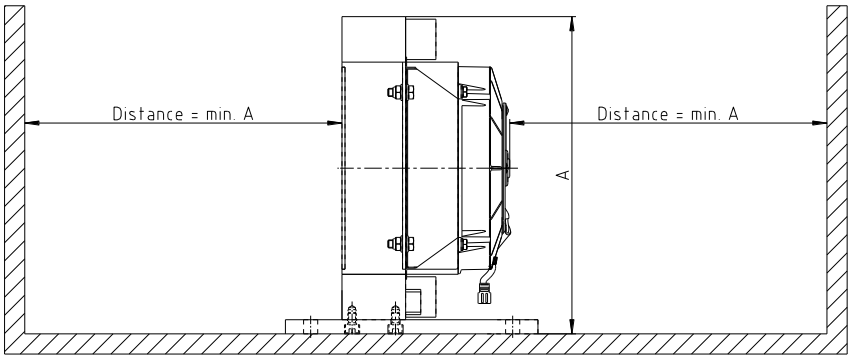

Illustration 12: Oil-air cooler; example: OAC75 and OAC100

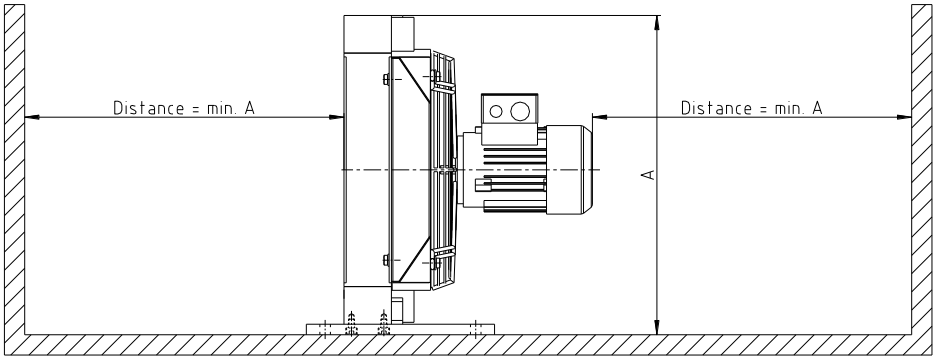

Illustration 13: Oil-air cooler; example: OAC200 to OAC2000

In order to achieve the optimum cooling capacity, the distance to the nearest wall should not fall below the height of the cooling element (dimension A), since only in this way proper air supply is ensured (see illustration 12 and 13).

☞ **The height of installation should not exceed the figure ≤ 1000 m.**

⚠ **Return flow of heated circulated air as well as assembly of the cooler core in front of heat sources should be avoided.**

⚠ **The engines have to be protected from direct solar radiation.**

☞ **An unfavourable place of installation may increase the noise level by reflection of sound.**

4 Assembly

4.3 Assembly of oil-air cooler

The oil-air cooler can be assembled in various positions, while the vertical design should be preferred. Sufficient fastening has to be assured.

Some engines have covered holes which serve for draining off condensed water that may be generated.

Please use proper hydraulic hoses to connect the oil-air cooler. These are connected on the entrance and exit side of the cooling element (see illustration 14 and 15).

Make sure the connections and hoses are adapted to the oil-air cooler with regard to pressure, flow rate, temperature and liquidity.

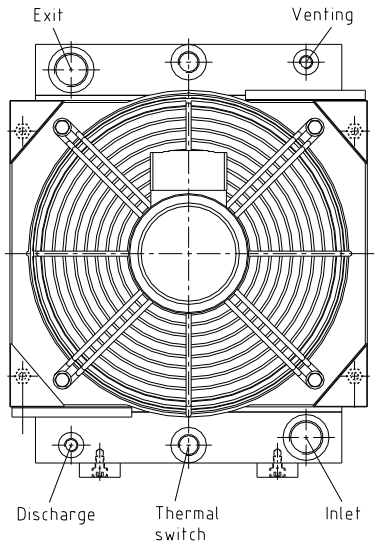

Illustration 14: Oil-air cooler; example: OAC200 to OAC2000

In the case of ATEX motor, a protective roof must be provided for the V1 design.

4.4 Thermal switch

A thermal switch to control the fan can be screwed directly in the cooler or tank (see illustration 14).

With the use in potentially explosive atmospheres only those thermal switches which comply with the specifications of the overall approval may be used.

4.5 Operating pressure and temperature

The maximum static operating pressure must not exceed the load of 26 bars during operation. With sizes OAC900 to OAC2000 the maximum static operating pressure is reduced to 21 bars.

With dynamic load maximum torque peaks of 14 bars must not be exceeded.

The maximum permissible temperature of the medium to be cooled must not exceed +110 °C. Please consult with KTR for any higher temperatures.

The temperature of the environment and the medium to be cooled should not change rapidly. Please note boiling and freezing point!

4 Assembly

4.6 Electrical connection

Before connecting the motor to the power supply compare the specifications on the type label (see illustration 17 resp. 17) of the motor to the voltage and frequency of the mains.

With the use in potentially explosive atmospheres only approved electric motors may be used.

The torsional direction of the fan and the air flow have to comply with the arrows specified on the oil-air cooler (see illustration 15).

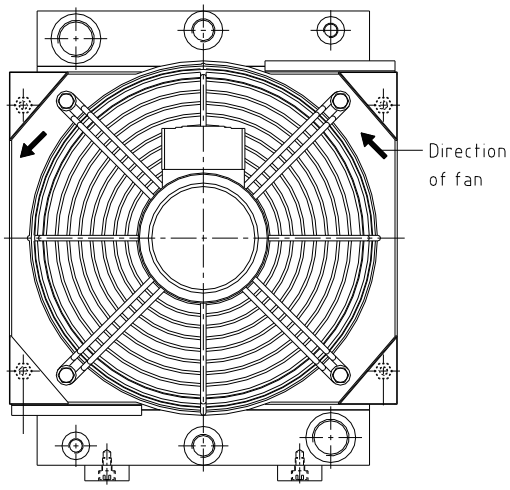

Illustration 15: Torsional direction - fan

The electric motors may be connected to the electric supply by qualified personnel only. Observe the universal specifications and electrical safety regulations!

Incorrect connections, damaged cables etc. may energize the connected components resp. make the electric motor rotate in the wrong direction.

The cooler has a separate grounding connection. It has to be connected to the grounding of the machine.

Please observe the operating instructions of the electric motor used by you.

We recommend to use an overload protection for the electric motor.

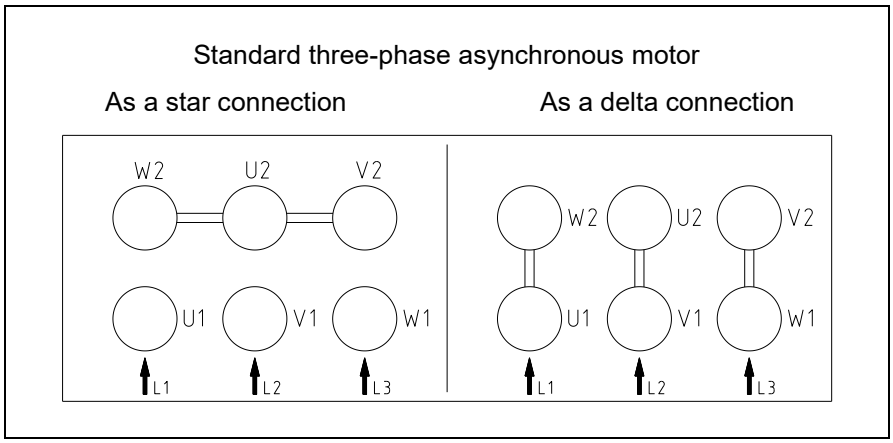

Illustration 16: Electrical connection- three-phase asynchronous motor

4.7 Cooling medium

The oil-air cooler is suitable for the use of mineral oil, synthetic oil and water glycol.

4 Assembly

4.8 Cleaning

Before cleaning make sure that the oil-air cooler has cooled down.
Touching the heated components causes burns.

With cleaning processes, e. g. with water, disconnect the cooler from the main power supply. The protection class needs to be observed.

Side of air laminas

The air laminas can be cleaned with compressed air. If seriously soiled, cleaning should be done by means of a high-pressure cleaner and degreasing agent. The jet should be kept carefully and in parallel with the air fin.

Oil side of cooling element

The oil side of the cooling element is cleaned by flushing with a degreasing agent.
Afterwards flush with the liquid/medium which is used later.

4.9 Marking of standard oil-air cooler

The oil-air cooler series OAC is marked as follows:

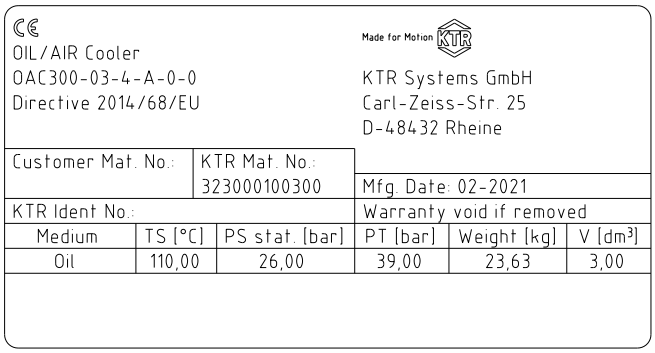

Illustration 17:
Examples - type label

4.10 Diagrammes - pressure loss and power

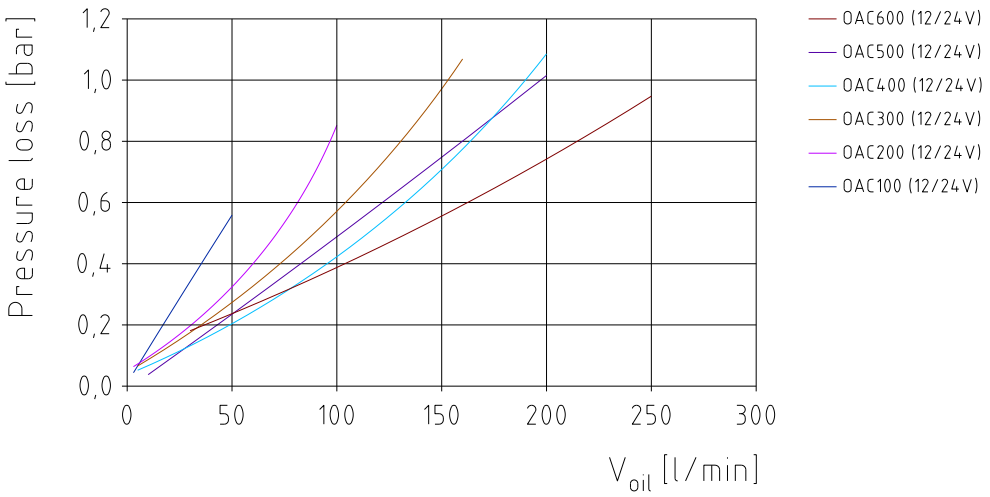

Diagram 1: pressure loss - OAC100 to OAC600 (12/24V)

4 Assembly

4.10 Diagrammes - pressure loss and power

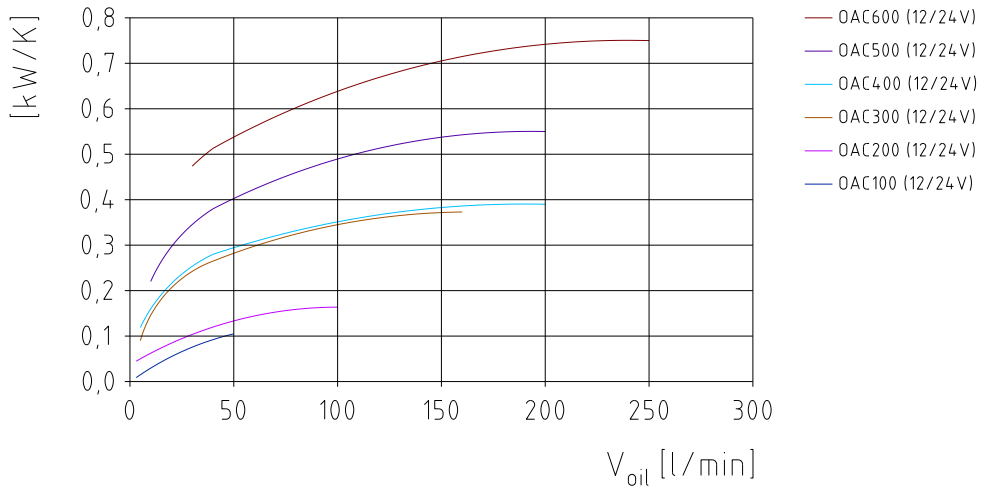

Diagram 2: power - OAC100 to OAC600 (12/24V)

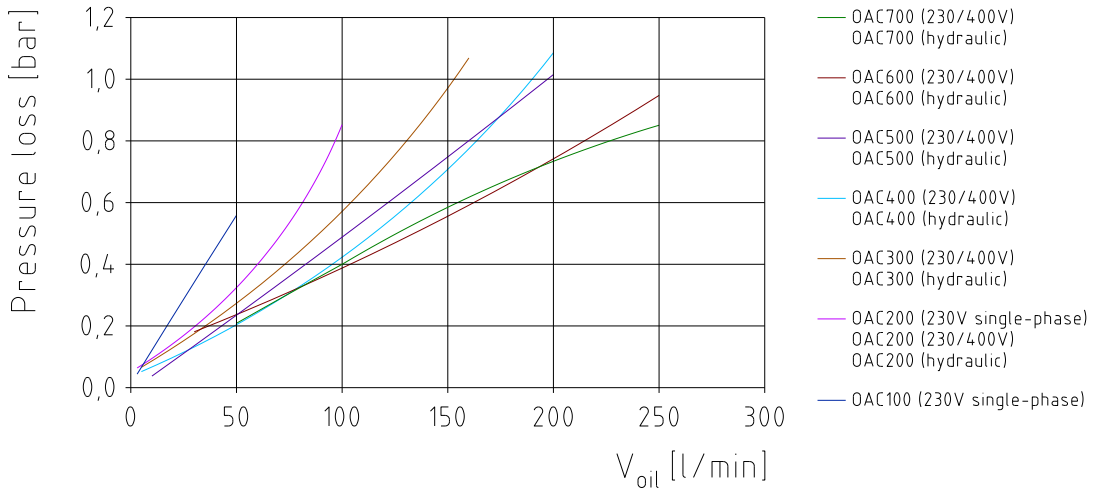

Diagram 3: pressure loss - OAC100 to OAC700

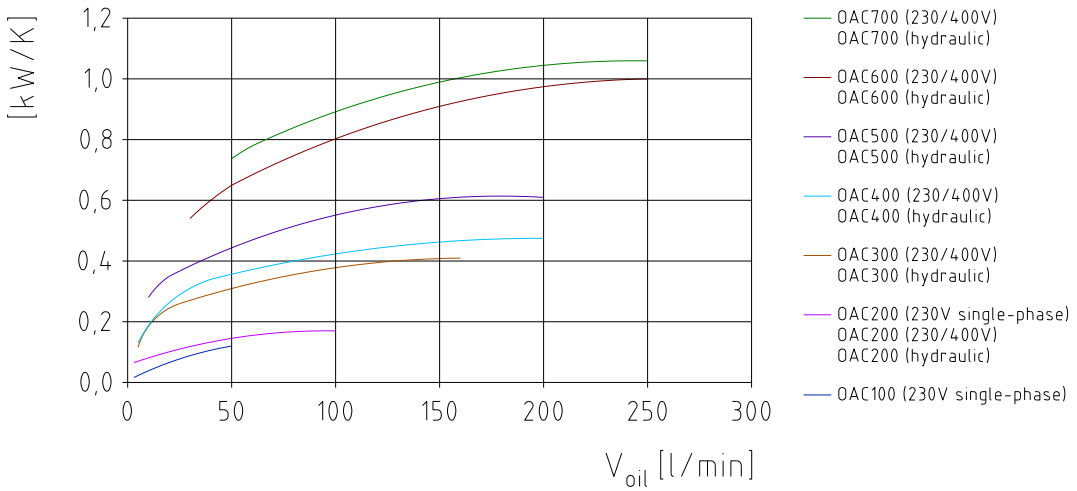

Diagram 4: power - OAC100 to OAC700

4 Assembly

4.10 Diagrammes - pressure loss and power

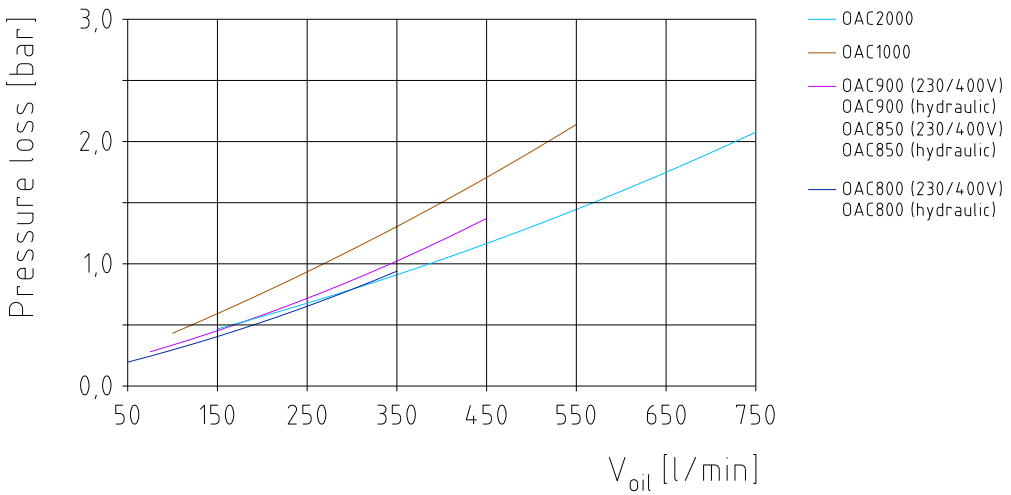

Diagram 5: pressure loss - OAC800 to OAC2000

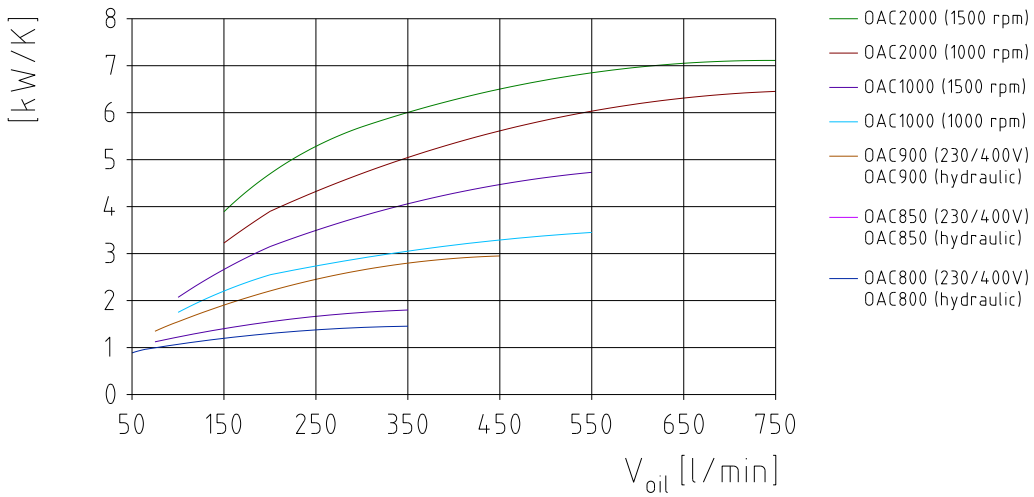

Diagram 6: power - OAC800 to OAC2000

4.11 Assembly - disassembly of the oil-air cooler into components

The cooler is assembled by KTR. The oil-air cooler is supplied ready for use.

A repair of the cooler by the plant operator/an external fitter is only permissible after written authorization by KTR.

With an interim storage the oil-air cooler needs to be protected against environmental impacts (moisture, solar radiation, etc.) as well as excessive dust exposure.

5 Start-up

Please make sure that the oil-air cooler is connected and fastened properly.

A grounding cable has to be connected to the oil-air cooler in the position marked (on the yellow grounding symbol).

Please observe the following procedure:

- Flush the oil-air cooler with the same fluid/medium as the other systems.
- Filter the liquid/medium after flushing.
- Vent the cooling element after filling (see illustration 14).
- The oil-air cooler and the protective grid have to be free from damage.
- The fan needs to rotate freely. The minimum gap (as per chapter 8.3) for fixed components needs to be observed.
- Hydraulic connections have to be tightened.
- The inside of the fan housing has to be free from any objects.
- The cooler has to be free of ice and snow. Ice or snow on the impeller may cause imbalance, vibrations and damage on the machine.

STOP

Components which are hurled may cause personal injuries, damage other components or generate sparking.

6 Maintenance and service

Preventive maintenance operations have to be regularly performed by the user.

The following items have to be reviewed:

- Unusual noise or vibrations must not be generated.

The oil-air cooler has to be regularly inspected for mechanical vibrations and monitored, if necessary, to prevent leakages and fatigue fracture of liquid supply and drainage reliably.

With vibrations inspect the screw connection of the motor.
If the damage has not been repaired in this way, consult with KTR.

- Proper fastening of the oil-air cooler has to be assured.
- Impurity of the oil-air cooler reduces the cooling power, make sure to clean your cooler (see item *cleaning*).
- Inspect the oil-air cooler for damages, defective components have to be replaced.
- Inspect the cooler core and the cable gland for leakages.

Leakages have to be eliminated immediately.
Oil which has escaped must be removed properly, since oil residues may vaporize on hot components and ignite.

6 Maintenance and service

- Inspect distances between fan and protective grid (see chapter 8.3).
- Inspect the individual components of the device for electrically conductive connections (including the grounding cable connection).
- The motor temperature has to be inspected with the device operating.

☞ **It must not exceed the temperature class specified in the type label (see illustration 18).**

- The bearings of the motors are permanently lubricated.

☞ **Re-lubrication is not possible. Observe the service life of the motor bearing as per the data sheet of the motor manufacturer.**
The bearings must be inspected, maintained and replaced, if necessary, as per the specifications of the motor manufacturer.

7 Spares inventory, customer service addresses

We recommend to store major spare parts on site to ensure the readiness for use of the machine in case if a cooler fails.

Contact addresses of the KTR partners for spare parts and orders can be obtained from the KTR homepage at www.ktr.com.

☞ **KTR does not assume any liability or warranty for the use of spare parts and accessories which are not provided by KTR and for the damages which may incur as a result.**

KTR Systems GmbH
Carl-Zeiss-Str. 25
D-48432 Rheine
Phone: +49 5971 798-0
E-mail: mail@ktr.com

8 Enclosure A

Advice and instructions regarding the use in Ex potentially explosive atmospheres

Sizes: OAC75 to OAC2000

8.1 Intended use in Ex potentially explosive atmospheres

Conditions of operation in Ex potentially explosive atmospheres

The oil-air coolers are suitable for the use according to EU directive 2014/34/EU.

Industry (with the exception of mining)

- *Equipment group II of category 2 and 3 (oil-air cooler is not approved/not suitable for equipment group 1)*
- Media class G (*gases, mist, vapours*), zone 1 and 2 (oil-air cooler is not approved/not suitable for zone 0)
- Media class G (dusts), zone 22 (oil-air cooler is not approved/not suitable for zones 20 and 21).
- Explosion group IIC (*explosion class IIA and IIB are included in IIC*)

Temperature class of the oil-air cooler (excluding drive and pump) 1)	max. perm. medium temperature	Max. surface temperature of the oil-air cooler to be considered (excluding drive and pump) 1)
T3	≤ +110 °C	+110 °C
T4	≤ +108 °C	+108 °C
T5	≤ +80 °C	+80 °C
T6	≤ +68 °C	+68 °C

1) Additional surface temperatures and temperature classes may arise on the attachments of the device. e. g. on the motor or pump. The highest surface temperatures resp. temperature classes on the overall machine each have to be considered.

Explanation:
- The permissible ambient temperature T_a for the use of oil-air coolers is intended from -40 °C to +55 °C.
- Subject to the operation, the medium temperature may be considerably higher than the ambient temperature.
- The component with the lowest temperature class is decisive for the operation.

In potentially explosive atmospheres
- the ignition temperature of dusts generated must at least be 1.5 times the surface temperature to be considered
- the glow temperature must at least be the surface temperature to be considered plus a safety distance of 75 K.
- the gases and vapours generated must amount to the temperature class specified.

8 Enclosure A

Advice and instructions regarding the use in Ex potentially explosive atmospheres

8.2 Ex Marking for potentially explosive atmospheres

The ATEX marking of the oil-air coolers series OAC is made on one component.

For the complete marking refer to the operating/assembly instructions.

Marking is as follows:

Oil-air cooler type OAC
<Year>

Ex II 2G Ex h IIC T6 … T3 Gb X
II 3D Ex h IIIC T68 °C … T110 °C Dc X
-40 °C ≤ T_a ≤ +55 °C
KTR Systems GmbH, Carl-Zeiss-Straße 25, D-48432 Rheine

CE
OIL/AIR Cooler
OAC300ExD-03-4-A-0-0
Directive 2014/68/EU

Made for Motion KTR
KTR Systems GmbH
Carl-Zeiss-Str. 25
D-48432 Rheine

Customer Mat. No.:	KTR Mat. No.: 323000120301		Mfg. Date: 02-2021		
KTR Ident No.:			Warranty void if removed		
Medium	TS [°C]	PS stat. [bar]	PT [bar]	Weight [kg]	V [dm³]
Oil	110,00	26,00	39,00	23,72	3,00
Ex II 3D Ex h IIIC T68 °C … 110 °C Dc X					
(-40 ≤ Ta ≤ + 55 °C)					

Illustration 18:
Examples - type label

Short marking:
(A short marking is only made if not possible differently for reason of space or functioning.)

Oil-air cooler type OAC
<Year>

Ex KTR

Comments on marking

Equipment group II	Non-mining
Equipment category 2G	Equipment ensuring a high level of safety, suitable for zone 1
Equipment category 3D	Equipment ensuring a normal level of safety, suitable for zone 22.
D	Dust
G	Gases and vapours
Ex h	Nonelectrical explosion protection
IIC	Gases and vapours of class IIC (including IIA and IIB)
IIIC	Electrically conductive dusts of class IIIC (including IIIA and IIIB)
T6 … T3	Temperature class to be considered, depending on the ambient temperature
T68 °C … T110 °C	Maximum surface temperature to be considered, depending on the ambient temperature
-40 °C ≤ T_a ≤ +55 °C	Permissible ambient temperature -40 °C to +55 °C.
Gb, Db	Equipment protection level, analogous to the equipment category
X	Special conditions apply for a safe use of the oil-air cooler.

8 Enclosure A

Advice and instructions regarding the use in Ex potentially explosive atmospheres

8.2 Ex Marking for potentially explosive atmospheres

Substance group - gases, fogs and vapours:
The marking with explosion group IIC includes the explosion groups IIA and IIB.

Substance group - dusts:
The marking with explosion group IIIC includes the explosion groups IIIA and IIIB.

8.3 Start-up for the use in Ex potentially explosive atmospheres

The oil-air cooler may only be used in the areas marked in the type label of the oil-air cooler and motor. The element with the least favourable class is decisive.
The decision of assessment of the place of operation is subject to the user.

The start-up of the coolers is permissible by qualified personnel only.

- It has to be made sure that oil supply and discharge are properly connected.
- The connections as well as the cooling element have to be tested for leakages after start-up.
- The electric motor or oil motor is to be connected such that the torsional direction marked on the oil-air cooler is observed as described under *Electrical connection*.
- The cooler has to be grounded separately in the position marked (equipotential bonding of cooler).
- Inspect the oil motor for leakages.

Leakages have to be eliminated immediately.
Oil which has escaped must be removed properly, since oil residues may vaporize on hot components and ignite.

- When the motor is running vibrations and unusual noise (frictional noise, squeaking, etc.) must not arise.

The oil-air cooler has to be regularly inspected for mechanical vibrations and monitored, if necessary, to prevent leakages and fatigue fracture of liquid supply and drainage reliably.

With vibrations inspect the screw connection of the motor.
If the damage has not been repaired, the oil-air cooler must not be operated any longer.
Please consult with KTR.

8 Enclosure A

Advice and instructions regarding the use in Ex potentially explosive atmospheres

8.3 Start-up for the use in Ex potentially explosive atmospheres

- The oil-air cooler may be set up vertically only and must be screwed to the base through all fastening holes.
- It has to be assured that the suction distances and discharge distances (distance A, as described in place of arrangement) are observed.
- The cooler core must not be sealed by foreign substances.
- Inspect distances between fan and protective grid.

☞ **The minimum gap width between rotating components and non-mobile components is at least 1 % of the relevant contact diameter (see table 4).**

Table 8

Size of cooler	Fan Ø in mm	Minimum gap to be observed
OAC75	190	≥ 1.9 mm (corresponds to 1 %)
OAC100	200	≥ 2.0 mm (corresponds to 1 %)
OAC200	280	≥ 2.8 mm (corresponds to 1 %)
OAC250	280	≥ 2.8 mm (corresponds to 1 %)
OAC300 to OAC500	380	≥ 3.8 mm (corresponds to 1 %)
OAC600 to OAC700	520	≥ 5.2 mm (corresponds to 1 %)
OAC800	630	≥ 6.3 mm (corresponds to 1 %)
OAC850	750	≥ 7.5 mm (corresponds to 1 %)
OAC900 to OAC1000	900	≥ 9.0 mm (corresponds to 1 %)
OAC2000	1000	≥ 10.0 mm (corresponds to 1 %)

- With the trial run make sure the permissible motor temperature is not exceeded.
  The temperature classes of cooler and motor specified in the type label have to be definitely observed.

8.4 Permissible accessories for the use in Ex potentially explosive atmospheres

Only those accessories certified by ATEX and complying with the temperature class (example: thermal switch, etc.) may be mounted to the oil-air cooler.

Ex **Any modifications on the design of the oil-air cooler intended for the use in potentially explosive atmospheres are not permissible.**

⚠ **The customer bears the sole responsibility for all machining processes performed subsequently by the customer. KTR does not assume any warranty claims.**

8 Enclosure A

Advice and instructions regarding the use in Ex potentially explosive atmospheres

8.5 EC Certificate of incorporation

EC Certificate of incorporation

according to EC machinery directive 2006/42/EC dated May 17, 2006, annex II B

The manufacturer - KTR Systems GmbH, D-48432 Rheine - states that the

oil-air cooler - OAC

described in the present operating/assembly instructions is an incomplete machine complying with the Machinery Directive 2006/42/EC. The oil-air cooler is exclusively intended for installation in a machine so that it does not comply with all specifications of the Machinery Directive. It is forbidden to start up the oil-air cooler until it is stated that the machine which the oil-air cooler is installed in complies with all basic specifications of the Machinery Directive 2006/42/EC.

The oil-air cooler complies with the specifications of the following standards/rules:

2006/42/EC	Machinery Directive (MD)
2014/30/EU	Directive for electromagnetic compatibility (EMC directive)
2014/35/EU	Low-voltage directive (LVD)
2014/68/EU	Directive for Pressure Equipment (PED)
DIN EN ISO 12100	Safety of machines

Rheine, Place	2026-06-12 Date	i. V. Christoph Bettmer Product Manager

8 Enclosure A

Advice and instructions regarding the use in Ex potentially explosive atmospheres

8.6 EU Declaration of conformity

EU Declaration of conformity

corresponding to EU directive 2014/34/EU dated 26 February 2014
and to the legal regulations adopted for its implementation

The manufacturer - KTR Systems GmbH, D-48432 Rheine - states that the

oil-air cooler - OAC

in an explosion-proof design described in these operating/assembly instructions are devices corresponding to article 2, 1. of directive 2014/34/EU and comply with the general safety and health requirements according to enclosure II of directive 2014/34/EU.
This declaration of conformity is issued under the sole responsibility of the manufacturers KTR Systems GmbH.

The oil-air cooler described in here complies with the specifications of the following standards/rules:

DIN EN ISO 80079-36:2016-12
DIN EN ISO 80079-37:2016-12
IEC/TS 60079-32-1
DIN EN 14986:2017-04

The oil-air cooler complies with the specifications of the directive 2014/34/EU.

According to article 13 (1) b) ii) of directive 2014/34/EU the technical documentation is deposited with the notified body (type examination certificate IBExU10ATEXB011 X):

IBExU
Institut für Sicherheitstechnik GmbH
Identification number: 0637
Fuchsmühlenweg 7

09599 Freiberg

Rheine, Place	2026-06-12 Date	i. V. Christoph Bettmer Product Manager